Commission&tempreture resetting

Please ensure that the commissioning of the valve is done under normal operating conditions.the thermostatic mixing valve is supplied factroy set at 38°C. to alter this setting,proceed as follows.

Note:mix water temperature at terminal fitting should never exceed 46□.

The valve has been factory set under blance pressures and hot water supply at 65°C. When your specific operating conditions are significantly different from the above,the temprature of the water may vary from the setting.

When the difference is too great,you can adjust the calibration of the valve to suit individual requirements of the installation:

1.Select 38°C or the arrow on the handle and check the temperature of the water being delivered to the outlet with a thermometer.

2.if the temperature is unacceptable procced tio reset the calibration an follows: Remove the temperature control handle by unscrewing and removing the lever,using the supplied hexagonal key loosen the grub screw and pull off the handle(do not remove the plastic stop ring).

Turn the spline of the valve clockwise to decrease the temperature and anti-clockwise to increase the temperature until 38°C is achived.

3.Ensure that the stop on the stop ring is at 12 o'clock and replace the handle with temperature override button also pointing at 12 o'clock being careful not to turn the spline of the valve.The valve setting is now calobrated to suit your requirements.

A digital hand-held thermometer should be used to measure the outlet temperature correctly which must not exceed 38°C.

Once the correct outlet temperature has been achieved,the valves internal mechanism should be exercised at least three times by alternately isolating the hot and cold supplies. this will cause the piston to travel its full stroke and will ensure that the valve is operating correctly.If the set temperature has drifted after this operation,then the commissioning operation should be repeated.

Once the valve has been commissioning,a fail-safe shut off test should be performed. Isolate the cold supply.The flow should reduce to a trickle within a couple of senconds depending on site conditions

If the temperature has not altered,repeat the test for the hot supply.If the either fail-safe function does not operate,ensure that supply pressures and temperatures are within the valves normal operating parameters.In addition,check that the hot supply temperature is at least 10°C above the valves set mixed outlet temperature ,i.e. hot to mix differential temperature.

If this is not the case,then the valve will be slow to shut down on cold water failure.

For optimum performance,it is recommended that dymamic pressures be as close as equal as possible.if the dynamic pressures are outside a 10:1 ratio,then a pressure reducing valve should be fitted to the higher supply pressure or,if preferred,the lower supply pressure boosted.

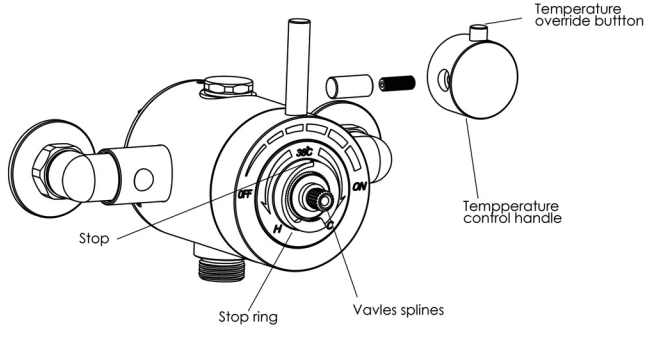

Exposed&Concealed Shower valve

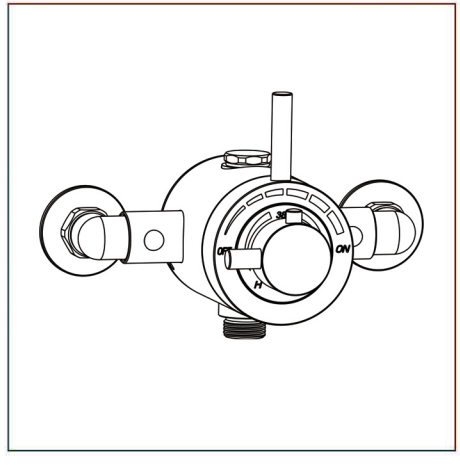

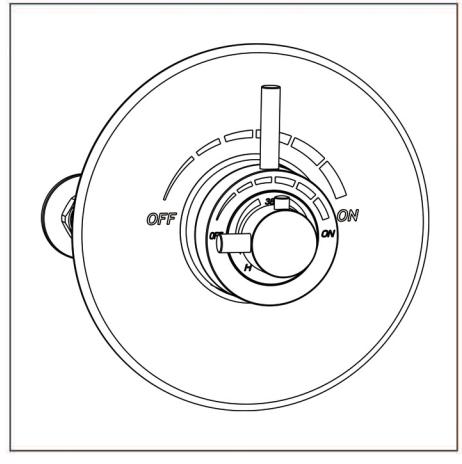

Handles & Concealing Plate may vary, depending on model chosen.

Traditional&Minimalist showers

INSTALLATION GUIDE

IMPORTANT-Please read

Please read these instructions carefully before starting installation and keep for future reference.

Operating Specifications

Hot water supply temperature

Maximum: 85 ℃

Minimum: 10 ℃ higher than the maximum reauired mixed temperature(recommended 65 ℃)

Operating Pressures:

Maximum operating pressure 5 bar

Minimum operating pressure 0.5 bar

WARNING

Before installing the new mixer it is essntial that you thoroughly flush through the supply in order to remove any remaining swarf,solder or other impurities. Failure to carry out this simple procedure could cause problems or damage to the working of the mixer.
This hints have been prepared for your guidance,you must exercise due care all the times. We do not accept responsibility for any problems that may occur through incorrect installation.

TECHNICAL DETAILS Dimensions in mm

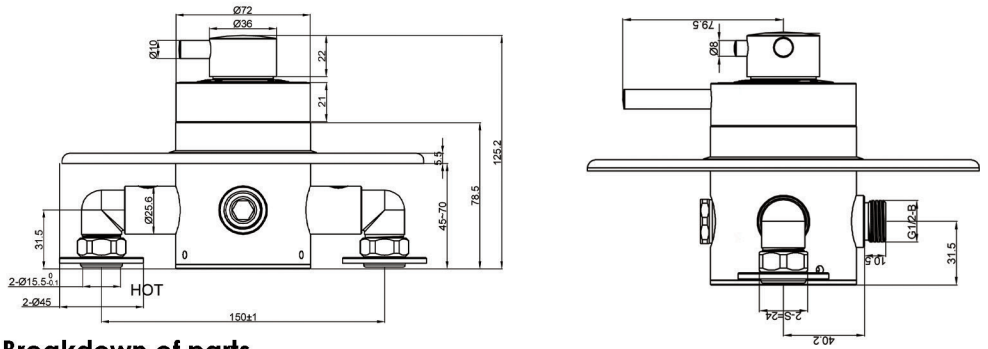

Breakdown of parts

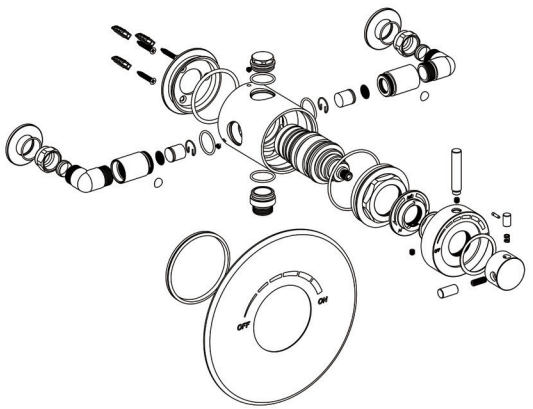

INSTALLATION

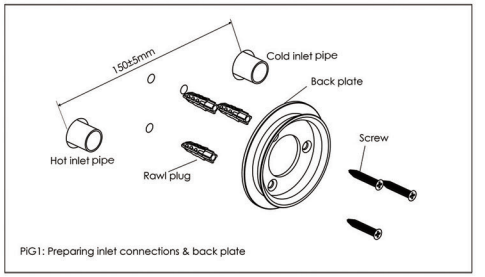

PIG1: Preparing inlet connections & back plate

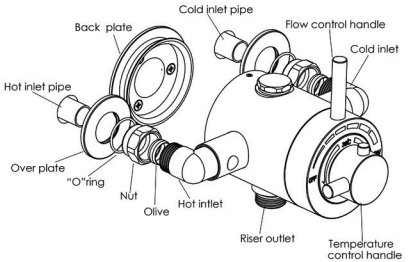

Remember to turn off the mains water supply before connecting to any existing pipe work.
Warning!Please check for any hidden pipes and cables before drilling holes in the wall.
Preparation:
Prepare the supply pipes(hot on the left and cold on the right)at the required height with a width of 150mm cnetres,making the ends of the pipes 15mm out from the face of the wall ,
Remove the nuts and olives and place the valve over pipes,mark the positon of the back plate and remove .Remove the back plate from the valve by loosening the grup screw underneath,position of the 4 holes.Drill the 4X6mm holes to a depth of 40mm and insert the wallplugs. Fix the back plate to the wall with the supplied scews valves.
Slide the cover plates on to the nuts and position on to each pipe with the cover plate against the wall,slide an olive onto each pipe.push the valve over each pipe and into the back plate,tighten the 2 nuts on to the hot and cold inlet,and then the grup screw underneath the valve.Finally connect the valve and the riser.

OUTLET CHANGE

Changing bottom outlet to a top outlet.
The valve is received with the outlet at the bottom for hose connection.if you reauire an outlet at the top,as shown in the figure here below,you will need to change the outlet position.
To do this follow the steps below.
1.Unscrew bottom outlet from the valve,using a spanner.
2.Unscew the top outlet plug from the valve using a spanner.
3.Fit plug into the hole at the bottom of the valve and tighten.
4.Insert the outlet into the top of the valve and tighten.
5.Fit riser pipe and check for leaking.

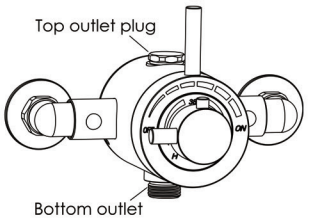

IMPORTANT
DO NO SIMPLY TURN THE VALVE OVER TO CHANGE THE OUTLET POSITION