MODE
BATHROOMS

8mm SINGLE SQUARE BATH SCREEN

Refer To Sheet 7 For Relevant Product Codes

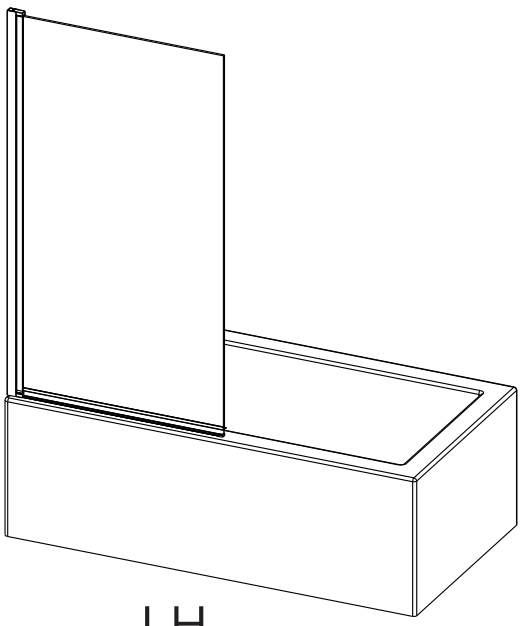

LH

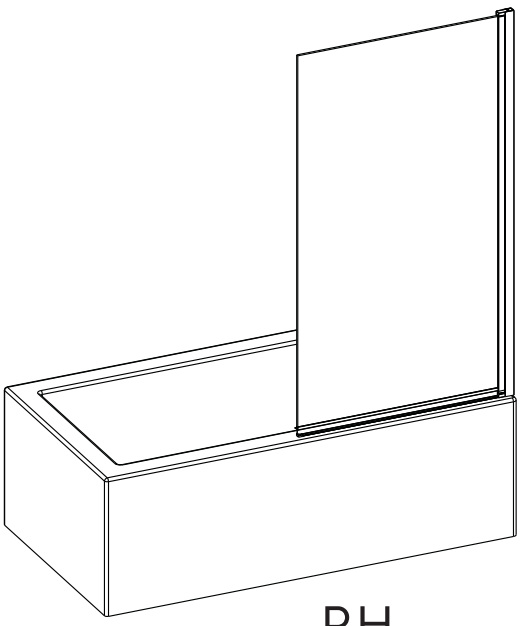

RH

Exclusively available @
VictoriaPlum.com

VictoriaPlum.com
0344 804 48 48

BEFORE YOU START, HERE IS SOME IMPORTANT INFORMATION

1) General Information

Please inspect this product upon delivery, any missing parts or manufacturing defects must be reported immediately to the supplier. Damage or defects reported later will not be accepted. **TAKE CARE WHEN HANDLING GLASS PARTS - AVOID HEAVY CONTACT BETWEEN THE GLASS EDGES AND ANY HARD SURFACE.**

Glass breakage claims will not be accepted after the product has been unpacked.

Please note: Aluminium is a soft metal, and undergoes a series of extrusion, fabrication, polishing and anodising processes in order to create your finished shower screen. Some light surface marks are normal, and is a result of the manufacturing processes. Quality control has ensured that this item is of a good standard, and is fit for purpose.

2) Additional Notes

Please read these instructions carefully before starting installation.
Special care should be taken when drilling walls to avoid hidden pipes or electrical cables.
Note: this product is heavy and may require two people to install.

TOOLS REQUIRED

DESCRIPTION	PART IMAGE	DESCRIPTION	PART IMAGE
Tape measure		Drill	
Spirit level	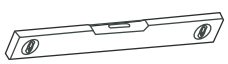	Flat-head Screwdriver	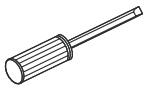
Pencil		Cross head Screwdriver	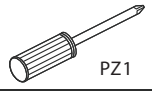
Ø6mm Drill bit	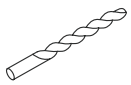	Mallet	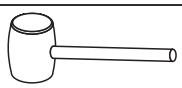
Ø3mm Drill bit	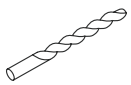	Silicone Sealant	

⚠ This product is heavy and may require two people to install.

ASSEMBLY DRAWING + BOX CONTENTS PARTS LIST

BEFORE STARTING THIS INSTALLATION - CHECK THAT THE CONTENTS IN THIS BOX MATCH THE CONTENTS SHOWN IN THE ASSEMBLY DRAWING

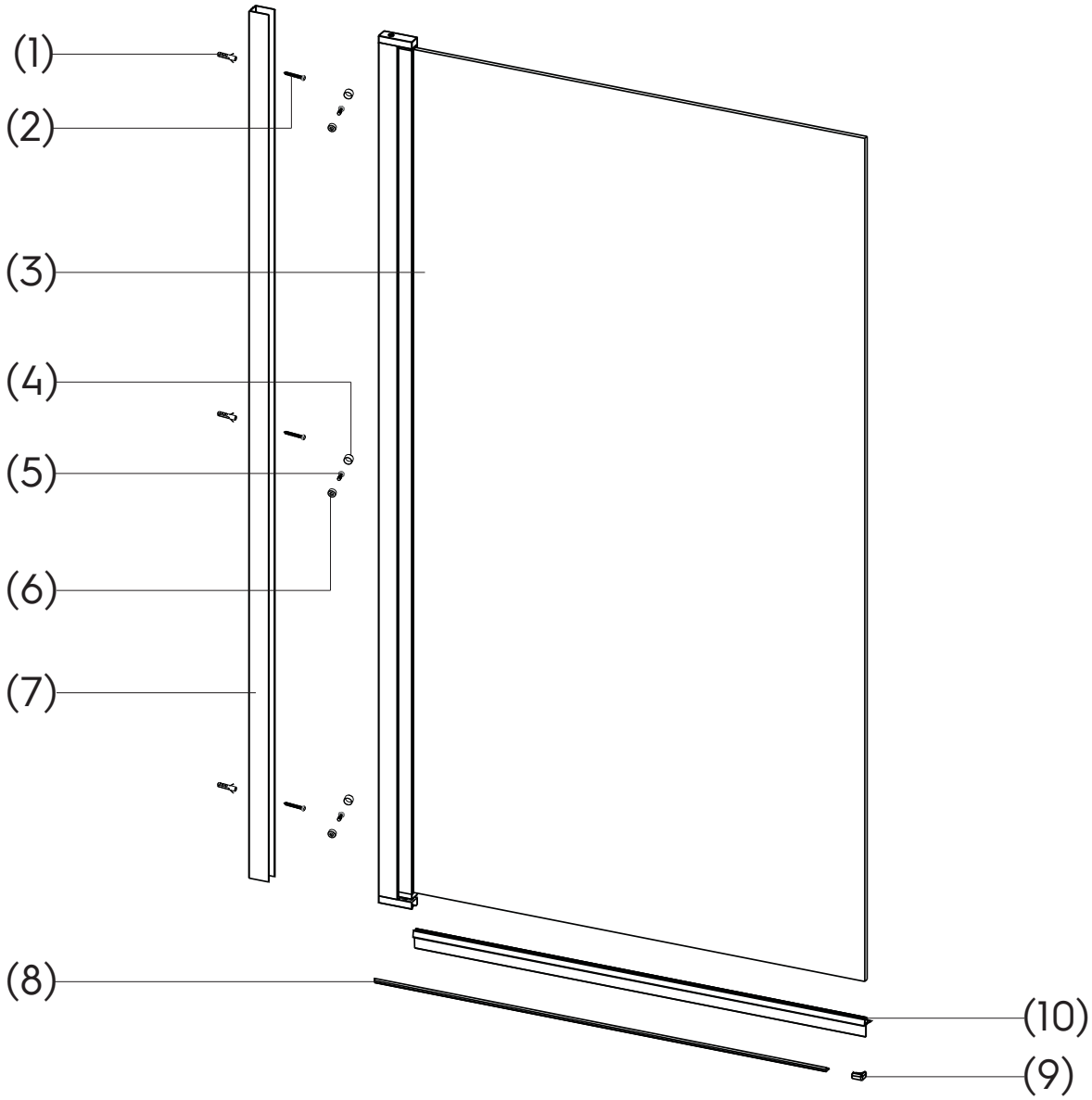

(1) 3x Wall Plugs

(2) 3x Screws 4x30

(3) 1x Moving Panel

(4) 3x Screw Cover Caps

(5) 3x Screws 4x12

(6) 3x Screw Clips

(7) 1x Wall Profile

(8) 1x Drip Strip

(9) 1x Bottom Strip Cap

(10) 1x Bottom Seal

ASSEMBLY INSTRUCTIONS

If you require help, we advise you to contact a competent plumber
Installation Steps

FITTED BATH SCREEN DRAWING

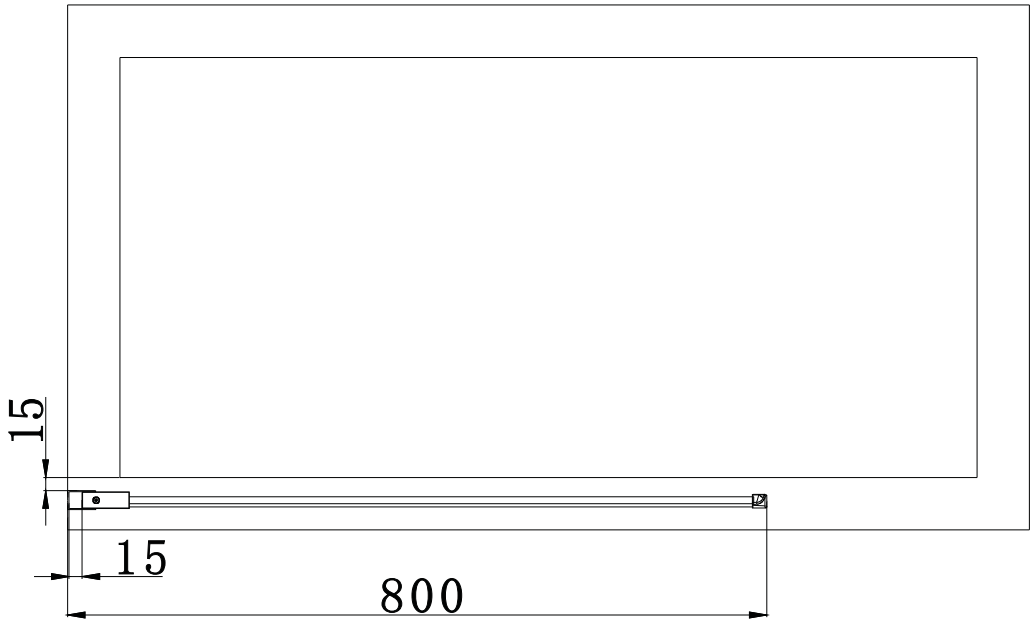

LH

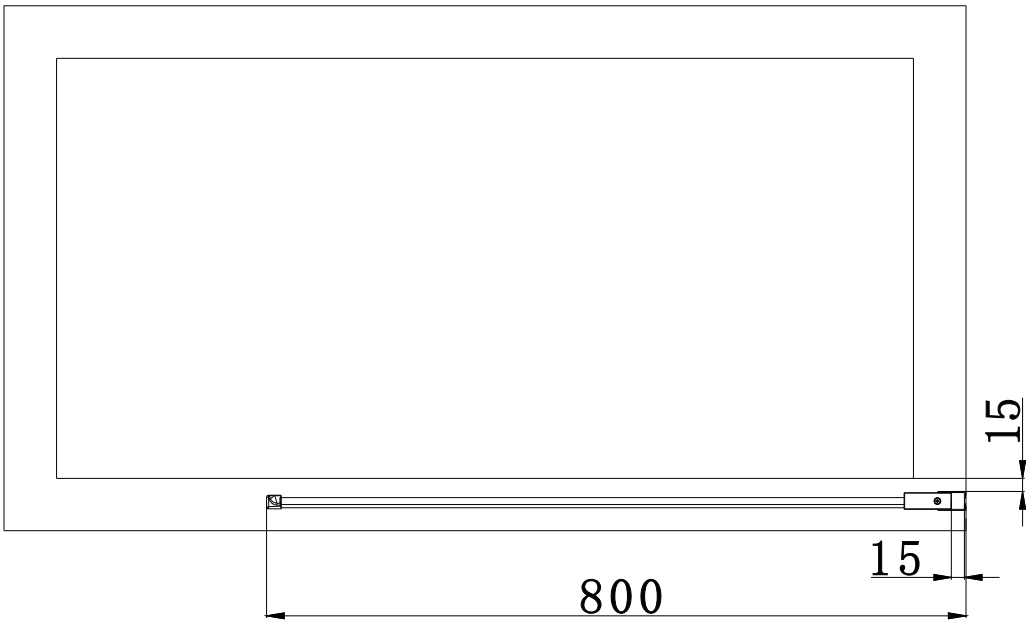

RH

Step 1 MARK WALL FIXING POSITIONS AND DRILL WALL HOLE

MAKE SURE THE BATH IS LEVEL, USING A SPIRIT LEVEL, BEFORE INSTALLING THIS SHOWER SCREEN.

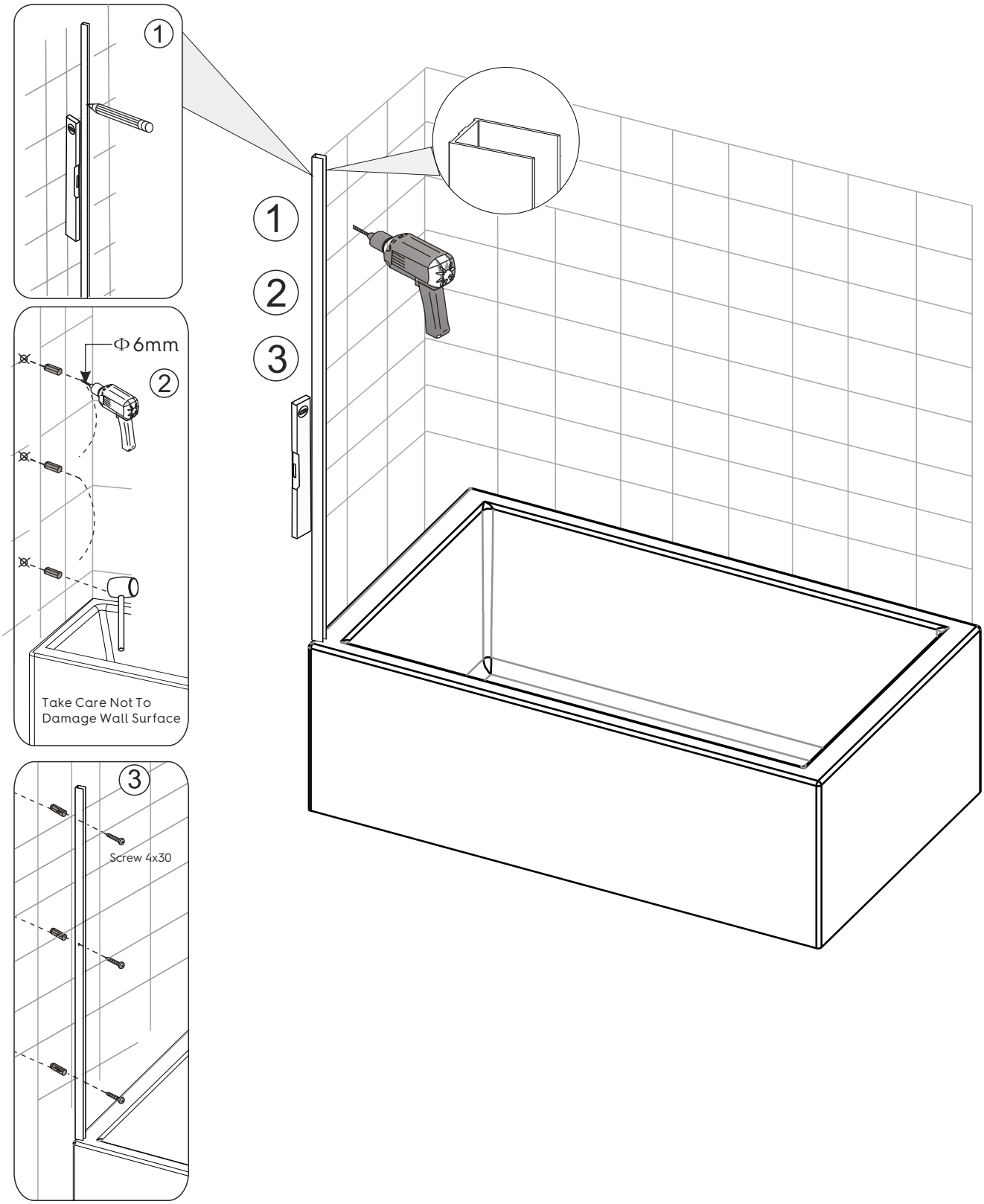

Step 2 SLIDE MOVING PANEL ON TO THE WALL PROFILE

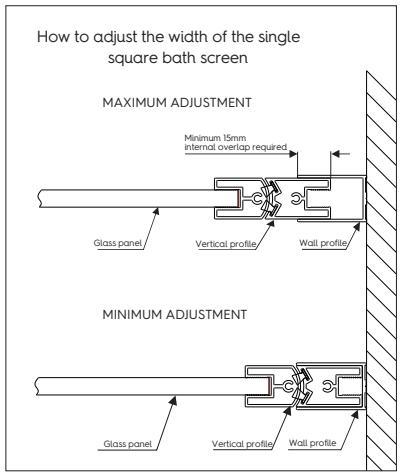

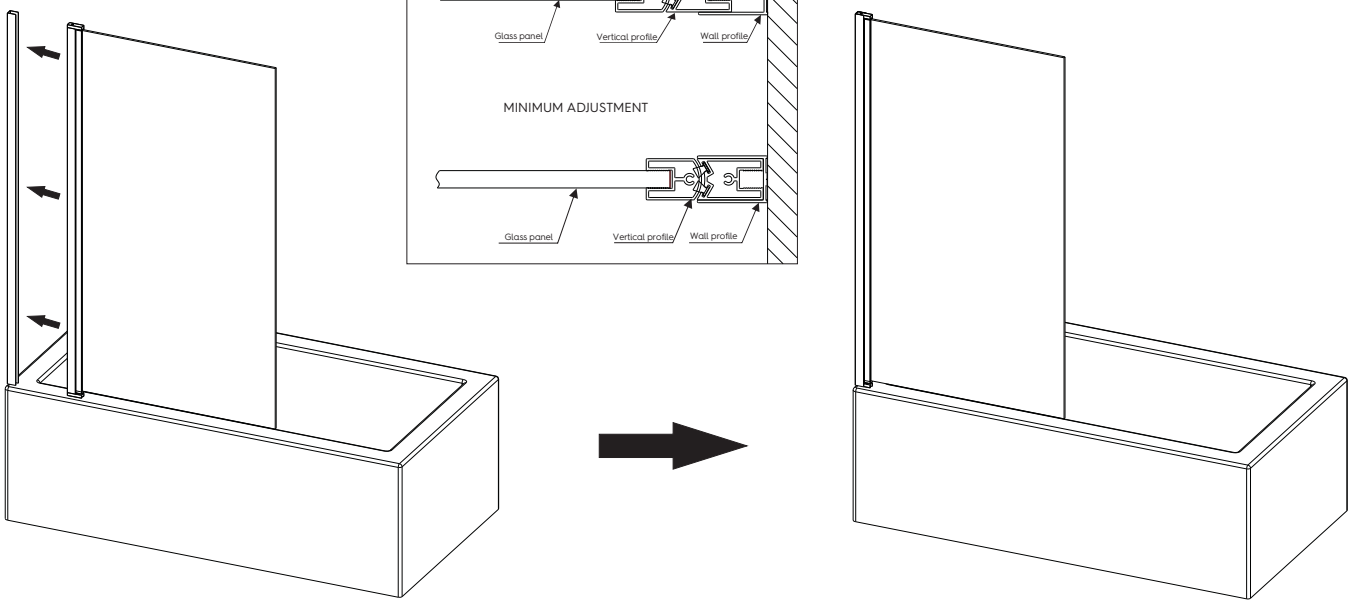

Step 3 FITTING THE PROFILES

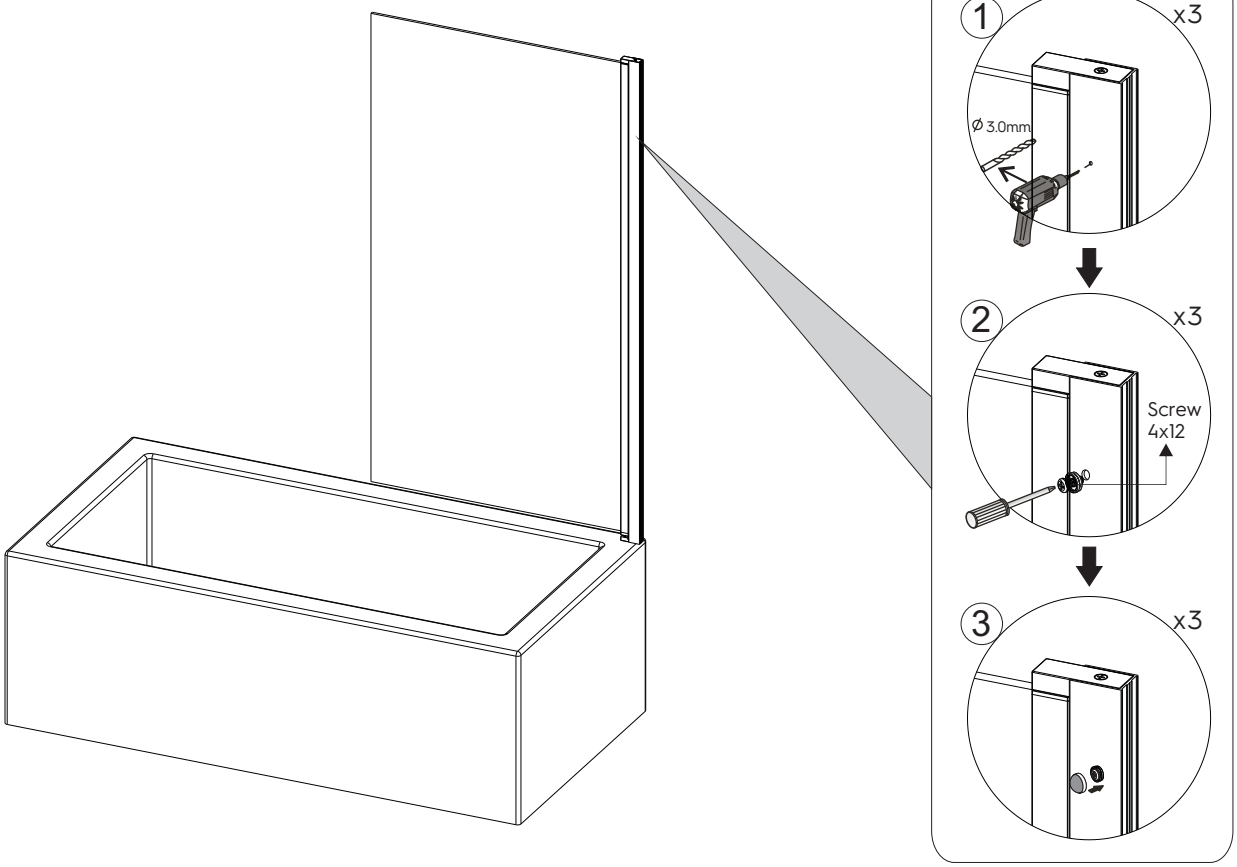

⚠ Take care not to drill to the glass

Step 4 FITTING THE SEALS AND THE DRIP STRIP

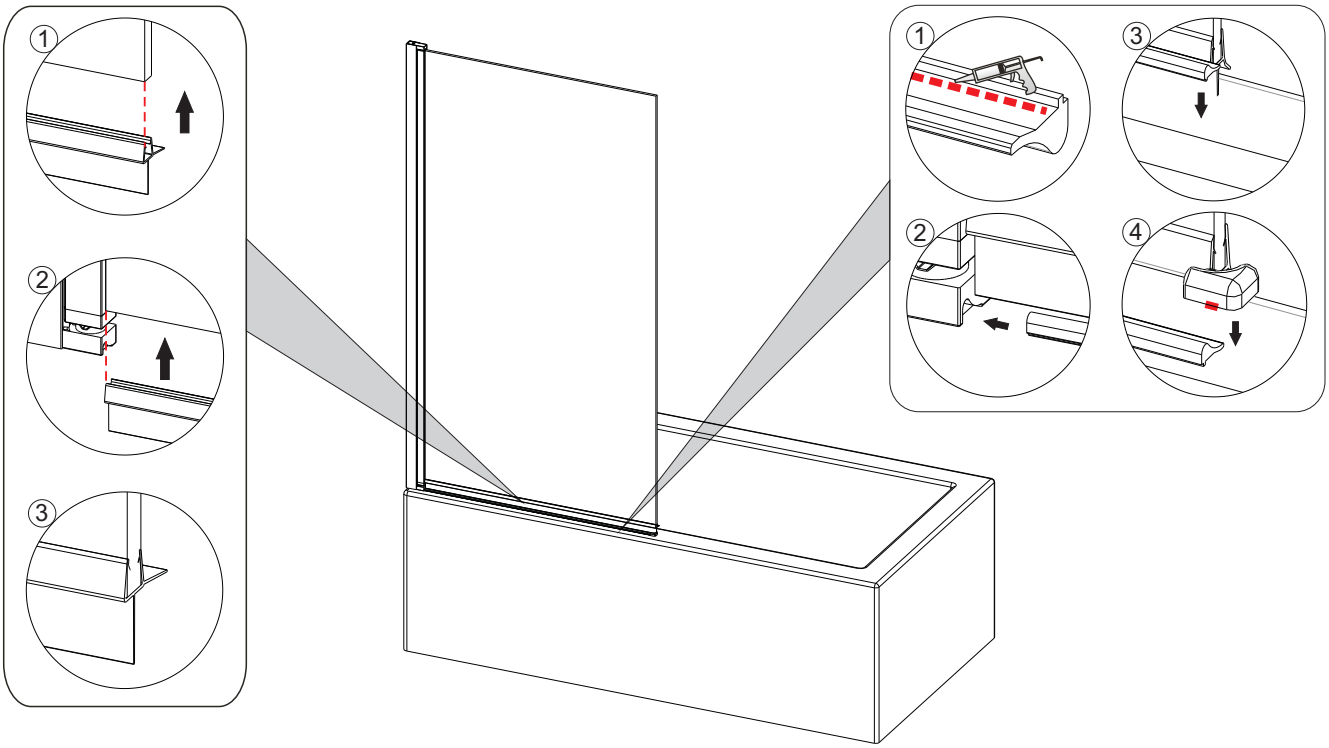

Step 5 SILICONE THE OUTSIDE EDGES

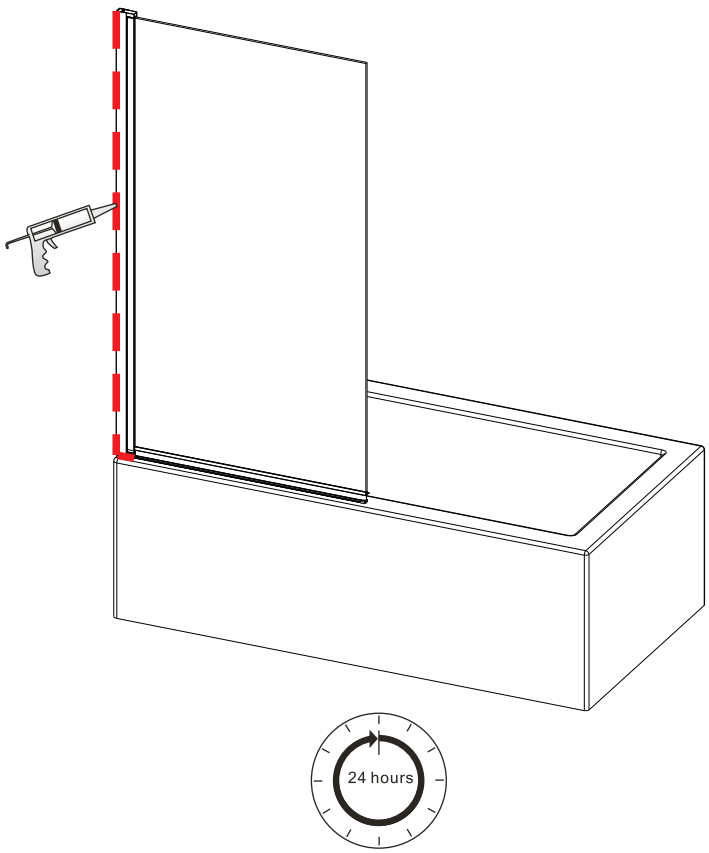

Silicone (outside edge only) where the vertical profile meets the wall.

CARE AND MAINTENANCE

1) AFTER CARE INSTRUCTIONS

Regularly clean your shower product with warm soapy water to prevent lime scale build up. Do not use abrasive cleaning fluids or materials, or strong chemical cleaners as this will damage the product surface.

2) MAINTENANCE

Clean the plastic parts with a cloth and mild detergent. Never use any abrasive creams, dissolvents, acetone or detergents and disinfectants that contain chlorine. The supplier accepts no liability for any type of use of care other than those contained in these instructions. The supplier reserves the right to introduce technical changes without notice.

COMMITMENT TO QUALITY

It is our intention that the quality and functions of this product are of the highest standard. If you require help we advise you firstly contact a competent plumber. However we understand that this may not always be the case, so should you experience any problems please contact out customer services quoting the following:

Product name: 8mm SINGLE SQUARE BATH SCREEN

Product code: JBS809L JBS809R

Customer help line number:0344 804 48 48

INSTALLERS NOTES

CE

Victoria Plum Limited, Bridgehead Business Park
Hessle, HU13 0DG

17

EN 14428 : 2015

DOP No.: J170103001-1

Shower enclosures with aluminium profiles and safety glass

Essential characteristics	Performance	Harmonised technical specification
Cleanability	Pass	Clause 4.2 of EN 14428:2015
Impact resistance/shatter properties	Pass	Clause 4.3 of EN 14428:2015
Durability	Pass	Clause 4.4 of EN 14428:2015

The packaging you have received with your product is 100% recyclable.
It must be disposed of in a safe and environmentally friendly way.
We suggest you take it to the local landfill site and discard in the designated bins.