Derwent Bathroom Furniture

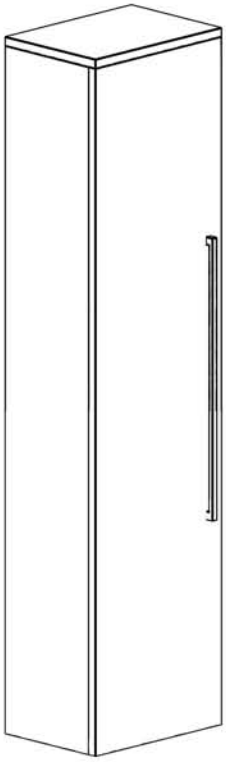

Tall Units

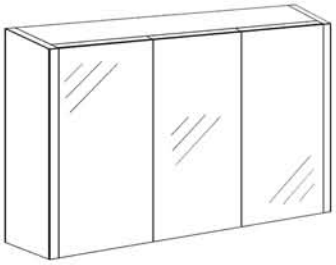

Mirror Cabinets

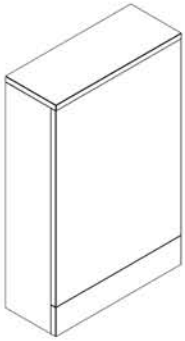

W.C. Units

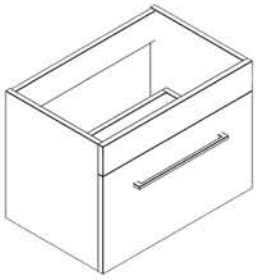

Wall Hung Basin Units

Door Units

Drawer Units

BATHROOM FURNITURE FITTING GUIDE

Please spend 5 minutes reading this section before commencing with with installation of your new furniture

1.Should any of your items have a defect,please do NOT install as returns wil not be accepted once fitted.
2.We advise that you use a qualified person to install your units,as any issues relating to poor fitting will not be accepted by the supplier.
3.You have purchased a handmade and in some cases hand painted product.Therefore,you may see some slight imperfections which the supplier may deem as acceptable.
4.This product is water resistant but NOT waterproof.On no account should any spillages or splashes,even water, be allowed to lie on any surface.All spillages and splashes should be wiped dry,failure to do so may shorten the life expectancy of the product and invalidate any guarantees.
5.Please avoid direct sunlight as this will cause the painted surfaces to discolour.
6.Due to motion in transit,the cabinet doors and drawers may need to be adjusted after installation.
7.Floor Standing units must be fitted back to the wall through the backrail using suitable fixings.(not supplied)
8.Basin units should be fitted as above.The basin should also be secured where applicable using Fischer bolts through the fixing points under the basin.(not supplied)Note that not all basins have this facility.
9.Wall Hung units must be secured back to the wall using the wall hanging brackets or suitable wall fixings when not supplied.Additional support is recommended using "L" brackets.(not supplied)
10.The hinge on the Laundry Basket can be adjusted by stackening the screw on the side of the sliding bar.
11.When fixing to a stud or panelled wall,appropriate frame work should be installed to support the basins and units.
12.Where units or worktops have to be cut-out for services,all raw edges MUST be sealed against water ingress.

Hinge Adjustment

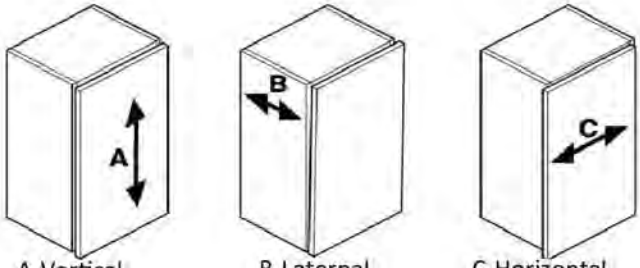

A-Vertical
Loosen screw'A' on all hinges.Adjust door and retighten screw.

B-Laternal
Loosen screw'B'.Adjust door and retighten screw.

C-Horizontal
Loosen screw 'B' ½turn. Turn screw'C' unit door is positioned correctly and retighten screw'B'.

BATHROOM FURNITURE CUSTOMER CARE GUIDE

Please note that although these units have been designed to give years of pleasure and satisfaction, you will help maintain the original beauty of your bathrom by following these guide lines.

Melamine,Vinyl and Foil Wrapped Doors

Occasional marks,can in most cases,be removed with a soft damp cloth.More persistent marks can be removed using a non-silicone based furniture cleaner.Hot soapy water should be avoided.Once the mark is removed,the area should be wiped over with a damp cloth to remove any excess and dried with a soft clean cloth.On no account should solvent or an abrasive cleaner be used as permanet damage to the finish could take place.

High Gloss Doors

Use a cleaning product not containing aggressive substances like acetone,alcohol,bleach...as those components could seriously damage the surface of the door.The best would be to use a soft cotton or micro fibre cloth with only water and soft soap(containing a maximum 1% of liquid soap)

Carcase Componets.

Do not use polish on any surfaces.A damp cloth with soapy water will clean off most marks or spills. Bleaches,scouring pads and multi-surface cleaners should not be used.

Drawers,Runners,Door Hinges

These should be wiped out with a damp soapy cloth and wiped dry with a soft cloth as necessary.The roller runners and hinges are lubricated and should not be cleaned with a degreasing agent as this will affect the action of the moving parts.Never lean on partially or fully opened doors and drawers in order to gain acess to the units.The hinges are specified to adequately support the weight of the door,plus small additonal weights such as wire accessories.It is advised that once the bathroom has been installed you should check every six months that all screws on the hinges are tight.

Worktops

Although the worktop is hard wearing,sharp objects will scratch and excessive heat will scorch the surface. Care should be taken not to drop any heavy objects onto the worktop as the surface may crack.
For cleaning,a damp soapy cloth will clean off most spills.Bleaches,scouring pads and multi-surface cleaners should not be used.Corrosive liquids and make-up should be wiped off immediately.On no account should any spillage,even water,be allowed to lie on the surface.

Temperature and Humidity

Avoid excessive change in temperature and humidity.Always try to ensure adequate ventilation.

General care,spillages and splashes

On no account should any spillages or splashes,even water,be allowed to lie on any surface.
All spillages and splashes should be wiped dry,failure to do so may shorten the life expectancy of the product and invalidate any guarantess.

Regulations

If it your intention to remove and replace your bathroom fittings with"like" units,then this is classed as"non regulated"and no building regulations would be required.However,building regulation approval may be required if the bathroom refurbishment involves altering the drainage or the internal layout within the dwelling to accommodate the new fitting such as a second bathroom.In this instance, we would advise you to contact the Building Control Department at your local authority to discuss the need for a formal building regulation application.
Macerator-Current building regulations specify that a sanipump smallboare system can be fitted in a dwelling where there is also a normal gravity dicharge W.C ..It should not be the only W.C.facility.
Electrical-Remember that double pole isolating switches are required for all electrical points apart from special razor sockets.All work must conform to BS7671:2008 the current I.E.E.Regulations.

Derwent 2 Door Mirror Cabinet
ODMIR600/CH600MRGR

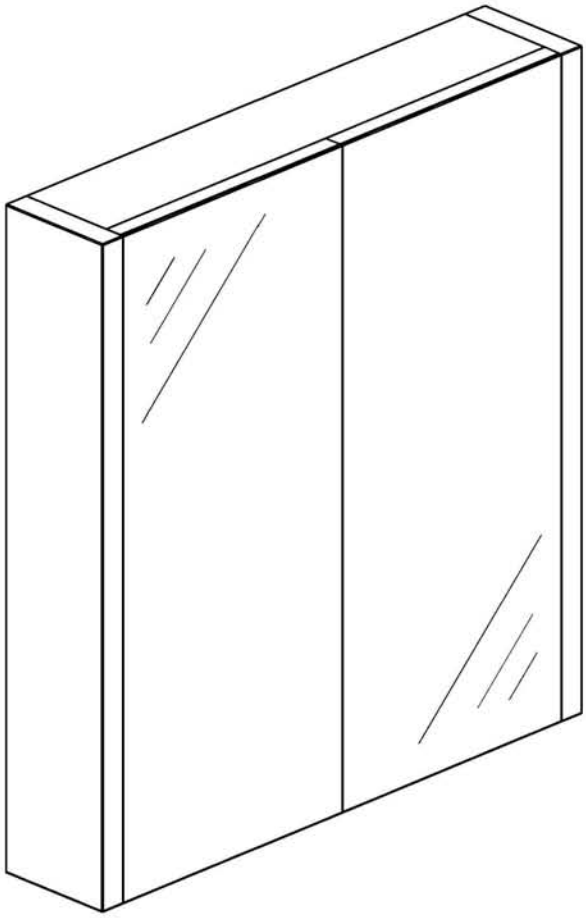

Derwent 2 Door Mirror Cabinet

ODMIR600/CH600MRGR

Step 1

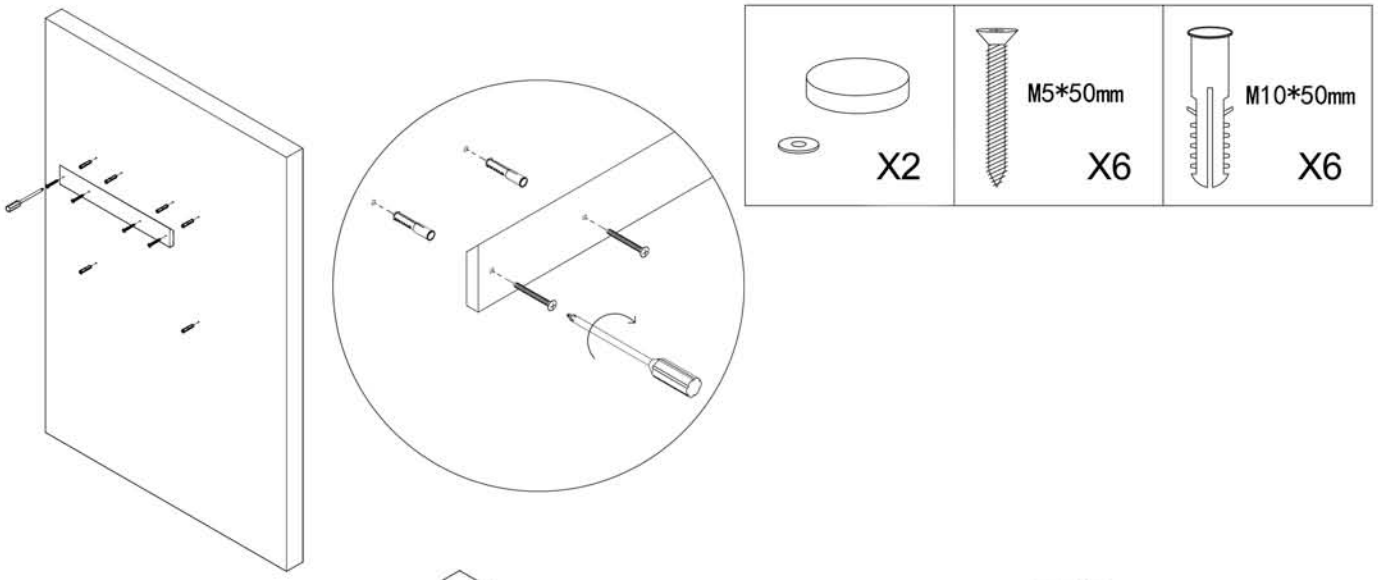
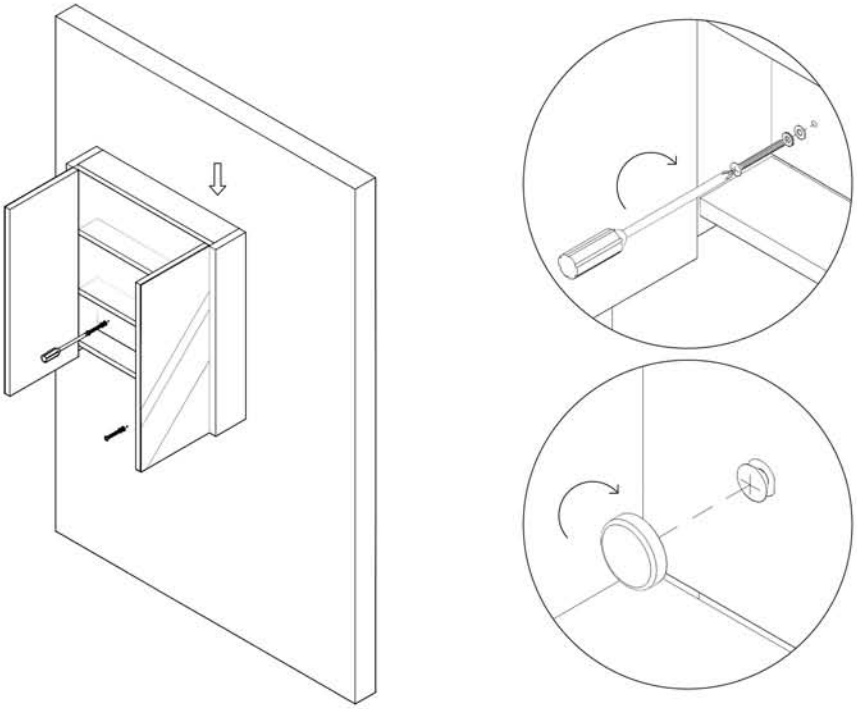
Step 2