MODE
BATHROOMS

O12003WHCA/O12003WHRTCA

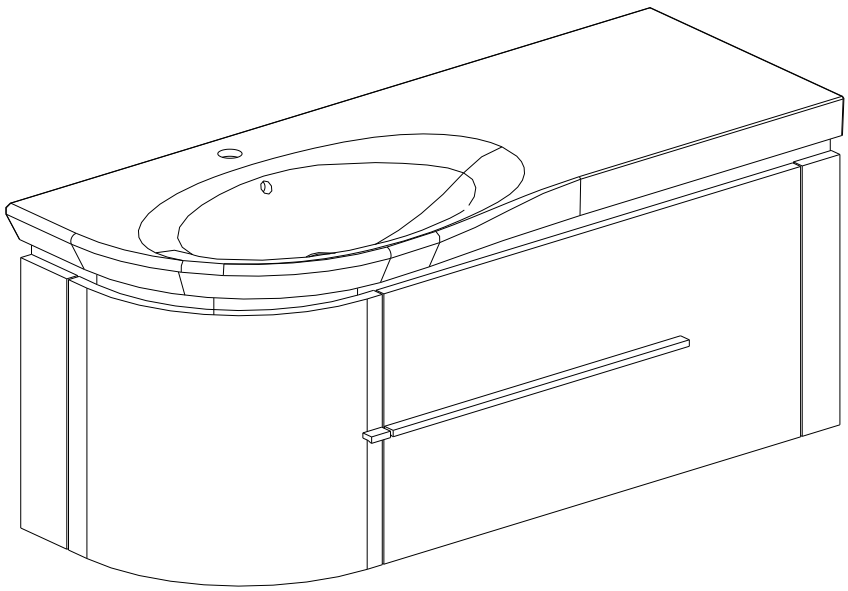

Exclusively available @
VictoriaPlum.com

VictoriaPlum.com
0344 804 48 48

BATHROOM FURNITURE FITTING GUIDE

Please spend 5 minutes reading this section before commencing with the installation of your new furniture.

1. Should any of your items have a defect, please do NOT install as returns will not be accepted once fitted.
2. We advise that you use a qualified person to install your units, as any issues relating to poor fitting will not be accepted by the supplier.
3. You have purchased a handmade and in some cases hand painted product, therefore you may see some slight imperfections which the supplier may deem as acceptable.
4. This product is water resistant but NOT waterproof. On no account should nay spillages or splashes, even water, be allowed to lie on any surface. All spillages and splashes should be wiped dry, failure to do so may shorten the life expectancy of the product and invalidate any guarantees.
5. Please avoid direct sunlight as this will cause the painted surfaces to discolour.
6. Due to motion in transit, the cabinet doors and drawers may need to be adjusted after installation.
7. Floor standing units must be fitted back to the wall through the back rail using suitable fixings (not supplied).
8. Basin units should be fitted as above. The basin should also be secured where applicable using Fischer bolts through the fixing points under the basin (not supplied). Note that not all basins have this facility.
9. Wall hung units must be secured back to the wall using the wall hanging brackets or suitable wall fixings when not supplied. Additional support is recommended using 'L' brackets (not supplied).
10. The hinge on the laundry basket can be adjusted by slackening the screw on the side of the sliding bar.
11. When fixing to a stud or panelled wall, appropriate frame work should be installed to support the basins and units.
12. Where units or worktops have to be cut-out for services, all raw edges MUST be sealed against water ingress.

DRAWER ADJUSTMENT

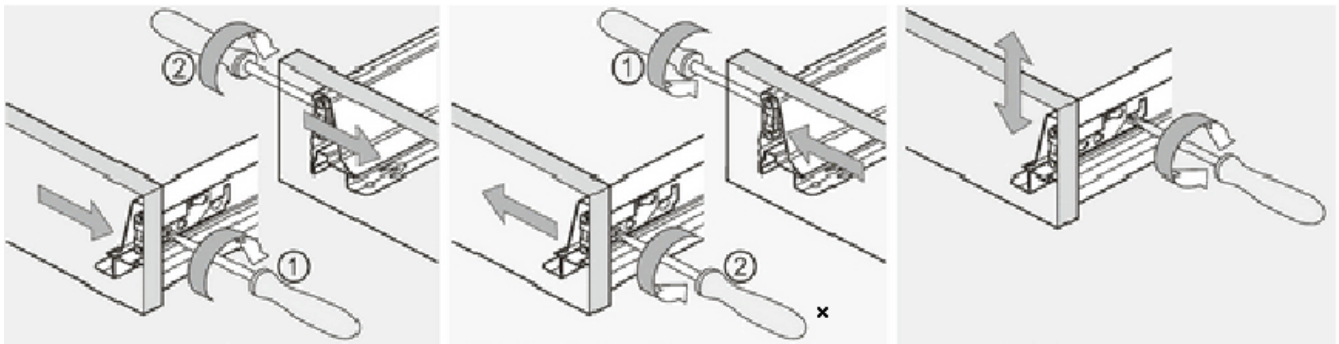

Exclusively available @
VictoriaPlum.com
VictoriaPlum.com
0344 804 48 48

BATHROOM FURNITURE CUSTOMER CARE GUIDE

Please note that although these units have been designed to give years of pleasure and satisfaction, you will help maintain the original beauty of your bathroom by following these guide lines.

Melamine, Vinyl and Foil Wrapped Doors

Occasional marks, can in most cases, be removed with a soft damp cloth. More persistent marks can be removed using a non-silicone based furniture cleaner. Hot soapy water should be avoided. Once the mark is removed, the area should be wiped over with a damp cloth to remove any excess and dried with a soft clean cloth. On no account should solvent or an abrasive cleaner be used as permanent damage to the finish could take place.

High Gloss Doors

Use a cleaning product not containing aggressive substances like acetone, alcohol, bleach ... as those components could seriously damage the surface of the door. The best would be to use a soft cotton or micro fibre cloth with only water and soft soap (containing a maximum 1% of liquid soap)

Carcase Components

Do not use polish on any surfaces. A damp cloth with soapy water will clean off most marks or spills. Bleaches, scouring pads and multi-surface cleaners should not be used.

Drawers,

Runners, Door Hinges

These should be wiped out with a damp soapy cloth and wiped dry with a soft cloth as necessary. The roller runners and hinges are lubricated and should not be cleaned with a degreasing agent as this will affect the action of the moving parts. Never lean on partially or fully opened doors and drawers in order to gain access to the units. The hinges are specified to adequately support the weight of the door, plus small additional weights such as wire accessories. It is advised that once the bathroom has been installed you should check every six months that all screws on the hinges are tight.

Worktops

Although the worktop is hard wearing, sharp objects will scratch and excessive heat will scorch the surface. Care should be taken not to drop any heavy objects onto the worktop as the surface may crack. For cleaning, a damp soapy cloth will clean off most spills. Bleaches, scouring pads and multi-surface cleaners should not be used. Corrosive liquids and make-up should be wiped off immediately. On no account should any spillage, even water, be allowed to lie on the surface.

Temperature and Humidity

Avoid excessive change in temperature and humidity. Always try to ensure adequate ventilation.

General care, spillages and splashes

On no account should any spillages or splashes, even water, be allowed to lie on any surface.
All spillages and splashes should be wiped dry, failure to do so may shorten the life expectancy of the product and invalidate any guarantees.

Regulations

If it is your intention to remove and replace your bathroom fittings with "like for like" units, then this is classed as "non-regulated" and no building regulations would be required. However, building regulation approval may be required if the bathroom refurbishment involves altering the drainage or the internal layout within the dwelling to accommodate the new fitting such as a second bathroom. In this instance, we would advise you to contact the Building Control Department at your local authority to discuss the need for a formal building regulation application.

Macerator - Current building regulations specify that a Sani pump small-bore system can be fitted in a dwelling where there is also a normal gravity discharge W.C. It should not be the only W.C. facility. Electrical - Remember that double pole isolating switches are required for all electrical points apart from special razor sockets. All work must conform to BS7671: 2008 the current I.E.E. Regulations.

Exclusively available @
VictoriaPlum.com

VictoriaPlum.com
0344 804 48 48

MODE
BATHROOMS

O12003WHCA/O12003WHRTCA

Tools required for installation

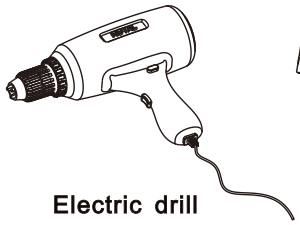
Electric drill

Silicone

Tape measure
(3m-5m)

Drill bit
(Φ8)

Pencil

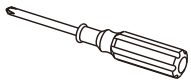
Screwdriver

9B

9C

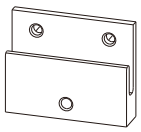
3D

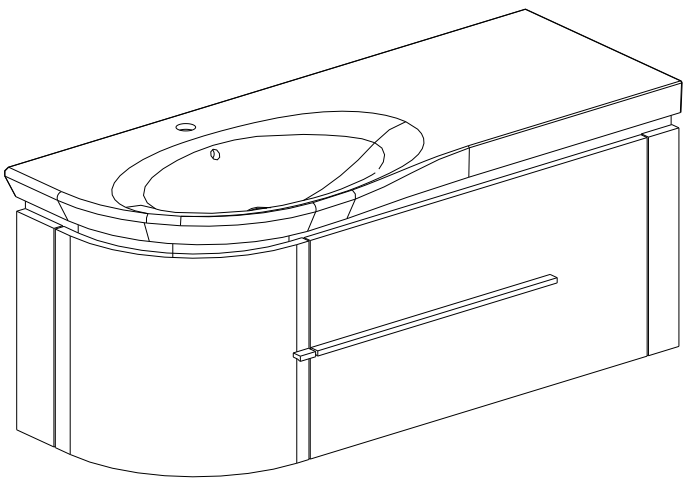

Exclusively available @
VictoriaPlum.com

VictoriaPlum.com
0344 804 48 48

1

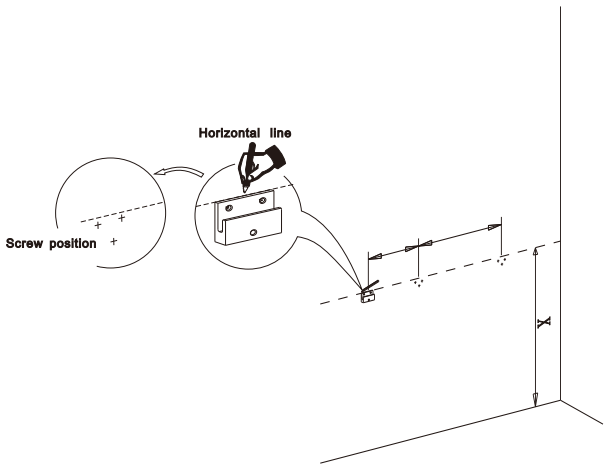

2

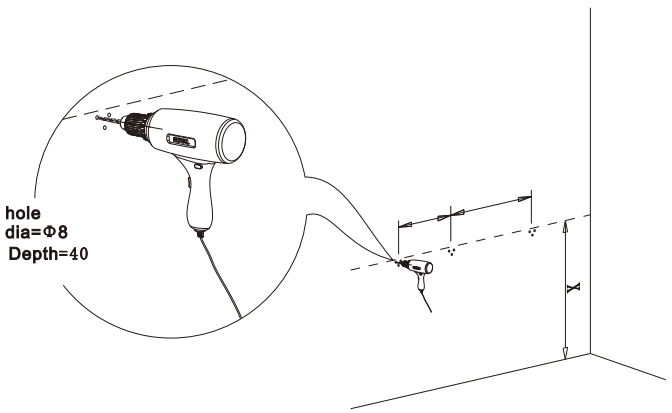

3

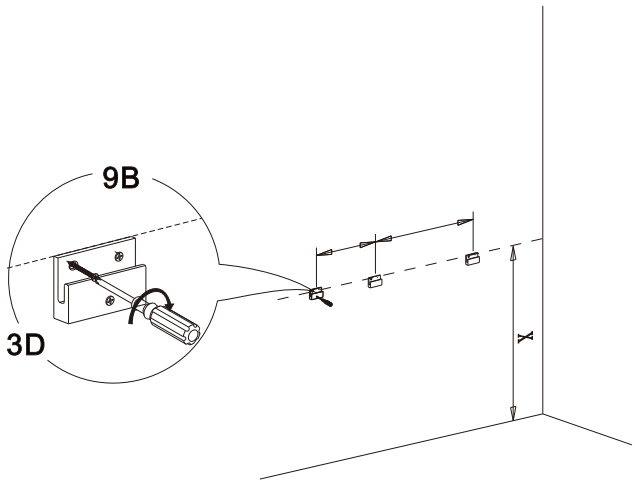

4

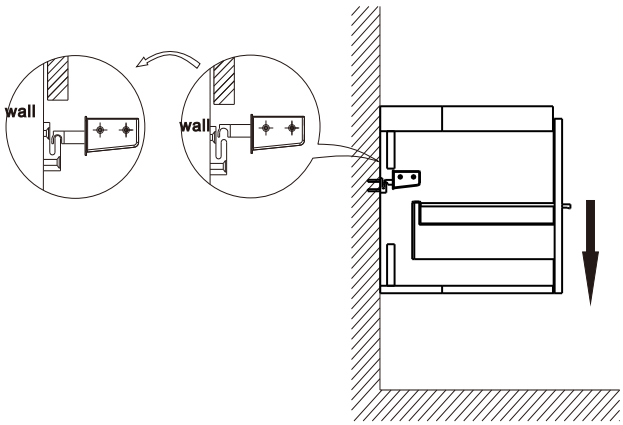

5

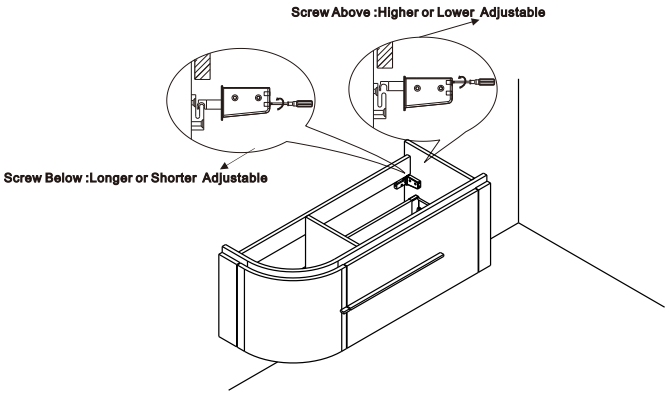

6

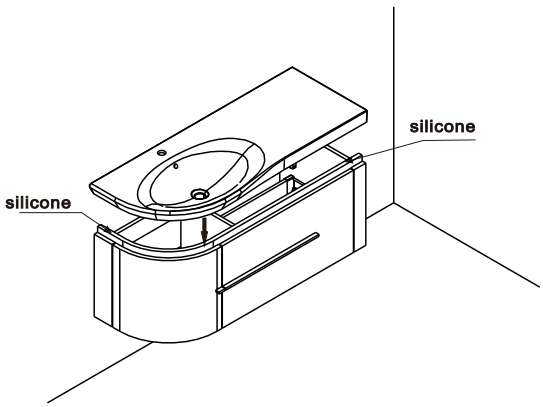

Exclusively available @
VictoriaPlum.com
VictoriaPlum.com
0344 804 48 48